S-1200 Single Output Series



Size：342*132*68mm

Features:

- AC input range selectable by switch
- Built-in EMI filter, tiny ripple
- Protections short circuit/overload/over voltage Over temperature
- Forced air cooling by built-in DC fan
- 43,000 hours of continuous operation at 25℃
- 100% full load burn-in test
- Compliance to IEC/EN60335-1 (PD3) and IEC/EN61558-1,2-16 suitable for home appliance
- 2 years warranty

SPECIFICATION

ISO9001:2008 CE RoHS

Model		S-1200-12	S-1200-15	S-1200-24	S-1200-48
OUTPUT	DC VOLTAGE	12V	15V	24V	48V
	RATED CURRENT	100A	80A	50A	25A
	CURRENT RANGE	0~100A	0 ~80A	0 ~ 50A	0 ~ 25A
	RATED POWER	1200W	1200W	1200W	1200W
	RIPPLE NOISE(Max)	240mVp-p	240mVp-p	280mVp-p	300mVp-p
	VOLTAGE ADJ.RANGE	10.8 ~ 13.2V	13.5~16.5V	21.6~ 26.4V	43.2 ~ 52.8V
	VOLTAGE TOLERANCE	±1.0%	±1.0%	±1.0%	±1.0%
	LINE REGULATION	±0.5%	±0.5%	±0.5%	±0.5%
	LOAD REGULATION	±0.5%	±0.5%	±0.5%	±0.5%
	SETUP,RISE TIME	1000ms,50ms			
	HOLD UP TIME (Typ.)	20ms (full load)			
INPUT	VOLTAGE RANGE	85 ~ 132VAC /170~264VAC by switch 240~370VDC			
	FREQUENCY RANGE	47 ~ 63Hz			
	EFFICIENCY(Typ.)	82%	84%	84%	86%
	AC CURRENT(Typ.)	11.6A/115VAC 5.8A/230VAC			
	INRUSH CURRENT(Typ.)	COLD START: 30A/115V 60A/230V			
	LEAKAGE CURRENT	<3.5mA / 240VAC			
PROTECTION	OVERLOAD	115 ~ 135% rated output power			
		Protection tye:Hiccup mode,recovers automatically after fault condition is removed			
	OVER VOLTAGE	13.8 ~ 16.2V	18.8 ~ 21.8V	27.6 ~ 32.4V	55.2 ~ 64.8V
		Protection type : Shut off o/p voltage, clamping by zener diode			
ENVIRONMENT	WORKING TEMP.	-10 ~ +60℃ (Refer to derating curve)			
	WORKING HUMIDITY	20 ~ 90% RH non-condensing			
	STORAGE TEMP.,HUMIDITY	-20 ~ +85℃, 20 ~ 95% RH			
	TEMP.COEFFICIENT	±0.03%/℃ (0 ~ 50℃)			
	VIBRATION	10 ~ 500Hz, 2G 10 min/1cycle,60min.each X Y Z axes			
SAFETY	SAFETY STANDARDS	GB4943.1, EN 60950.1 APPROVED			
	WITHSTAND VOLTAGE	I/P-O/P:1.5KVAC I/P-FG:1.5KVAC O/P-FG:0.5KVAC			
	ISOLATION RESISTANCE	I/P-O/P, I/P-FG, O/P-FG:100M Ohms / 500VDC			
	EMC EMISSION	EN61000-3-2:2014/EN61000-3-3:2013			
	EMC IMMUNITY	EN 55032:2015/EN55035:2017/60950-1			
OTHERS	MTBF	≥720.6K hrs MIL-HDBK-217F(25℃)			
	DIMENSION	342*132*68mm (L*W*H)			
	PACKING	2.45Kg; 4pcs/9.8Kg/0.9CUFT			

NOTE

1. All parameters NOT specially mentioned are measured at 230VAC input,rated load and 25℃of ambient temperature.
2. Ripple noise are measured at 20MHz of bandwidth by using a 12"twisted pair -wire terminated with a 0.1uf and 47uf parallel capacitors.
3. Tolerance includes set up tolerance,line regulation and load regulation.
4. Derating output is required under low input voltage. Please refer to the derating curve for details.
5. The power supply should be considered as a part of the components in the system. All EMC tests will test the test samples on a metal iron plate with a thickness of 1mm, a length of 360mm width of 360mm.

Mechanical Specification

Unit:mm

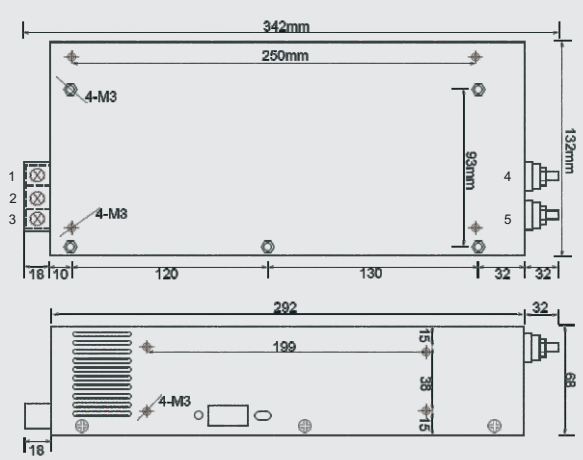

Terminal Pin No.Assignment:

Pin No.	Assigment	Pin No.	Assigment
1	AC/L	4	DC OUTPUT -V
2	AC/N	5	DC OUTPUT +V
3	FG⏚		

Block Diagram

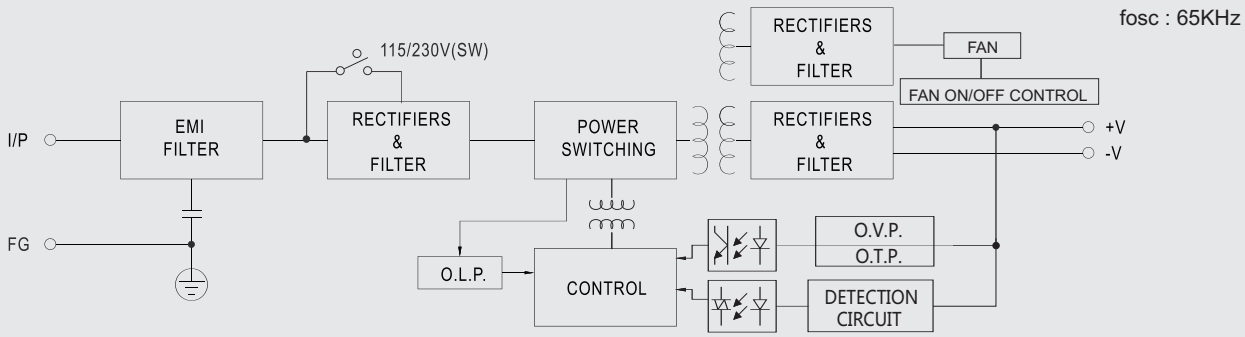

Derating Curve

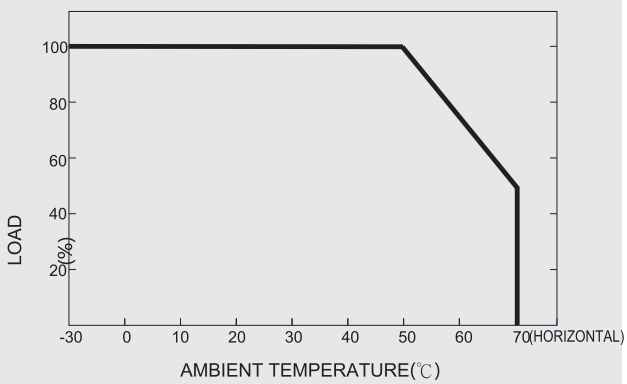

Static Characteristic

